JOYSTICK MODULE

Joystick module with push button



The X and Y position of the joystick is transmitted as a analog voltage to the output pins.
In addition, a button can be operated by pressing the stick.

MAIN FEATURES	
Operating Voltage	3,3 V - 5 V
Logic voltage	0 V - operating voltage
Function	X and Y position of the joystick is transmitted as analog voltage to the output pins Button actuation by pressing the stick

FURTHER DETAILS	
Article No.	COM-KY023JM
EAN	4250236816845
Customs tariff No.	8536501190
Dimensions	34 x 39 x 26 mm
Scope of delievery	Joystick module

PINOUT

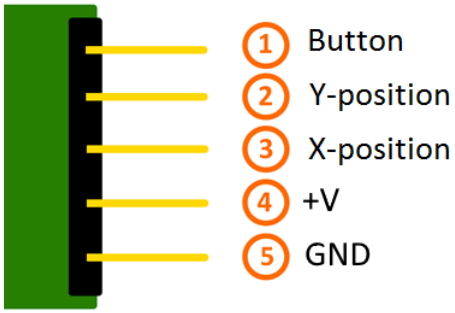

published: 04.06.2019